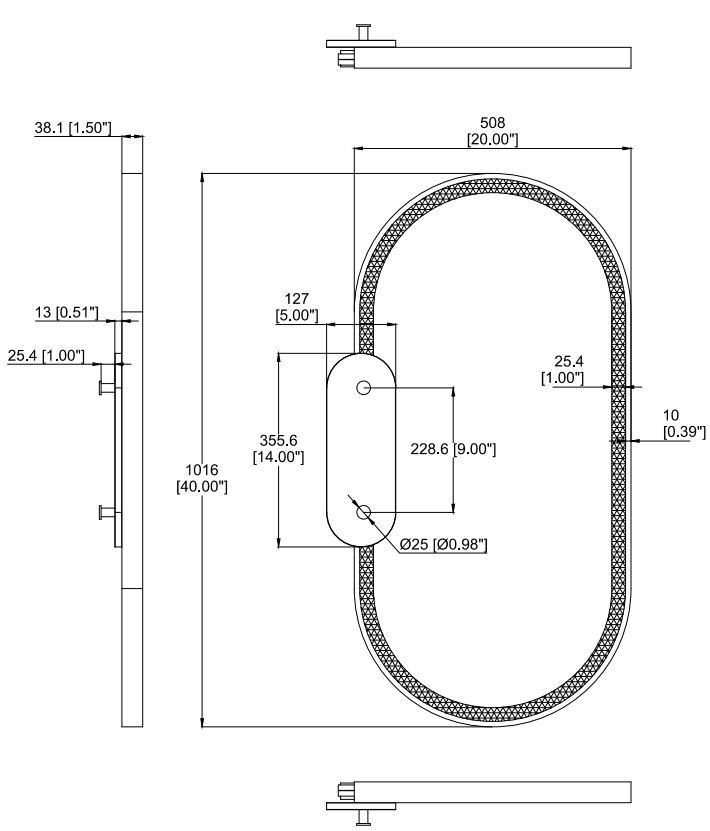
38.1 [1.50"]
508
[20.00"]
13 [0.51"]
25.4 [1.00"]
127
[5.00"]
25.4
[1.00"]
10
[0.39"]
355.6
[14.00"]
228.6 [9.00"]
1016
[40.00"]
Ø25 [Ø0.98"]

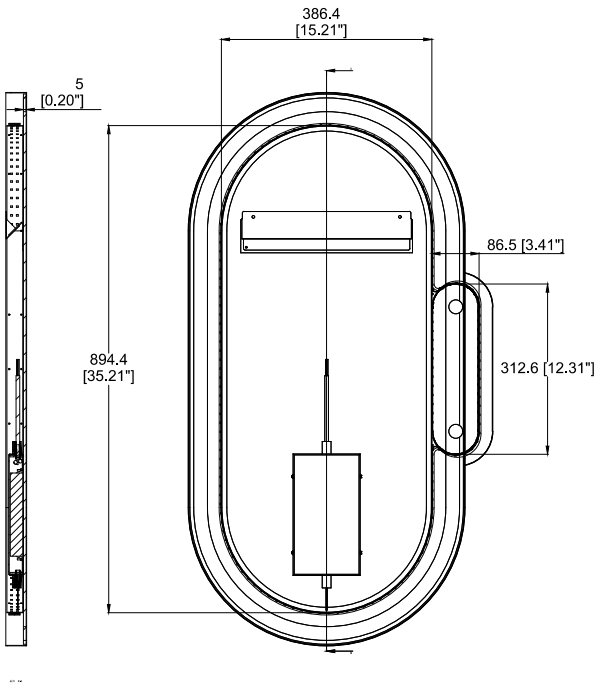
386.4
[15.21"]
5
[0.20"]
86.5 [3.41"]
894.4
[35.21"]
312.6 [12.31"]

